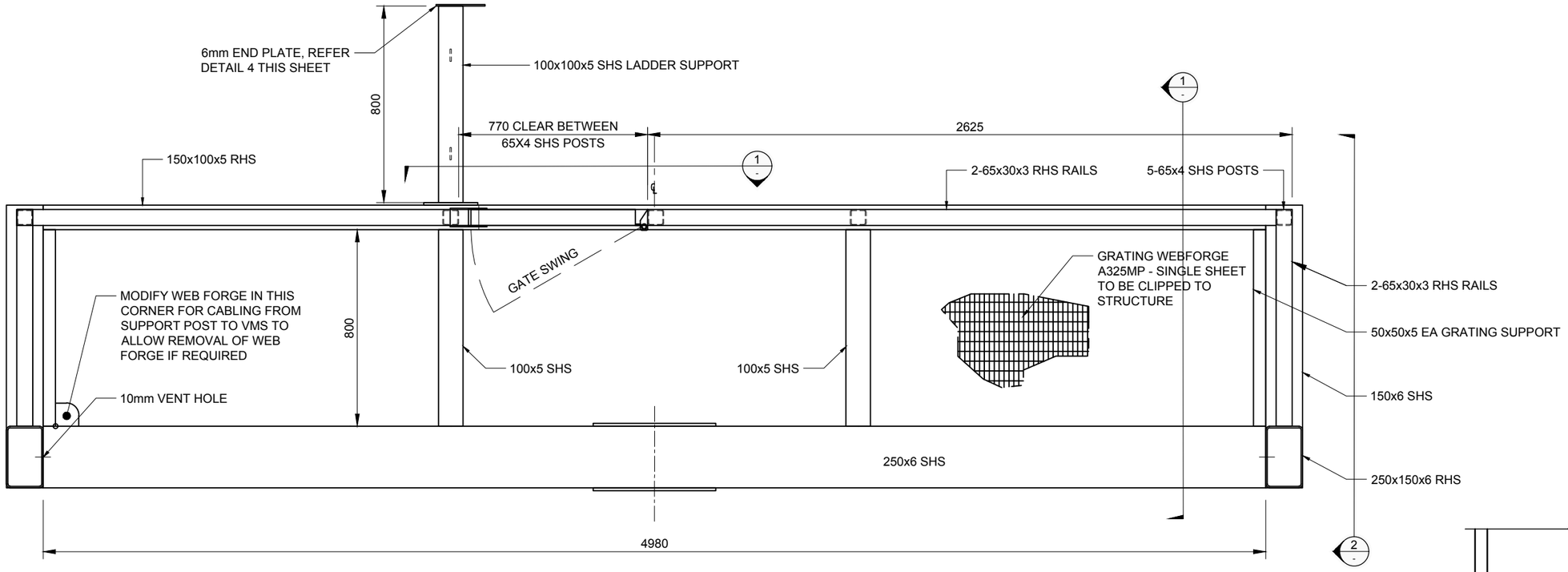

1 ACCESS PLATFORM PLAN
SCALE: 1:20

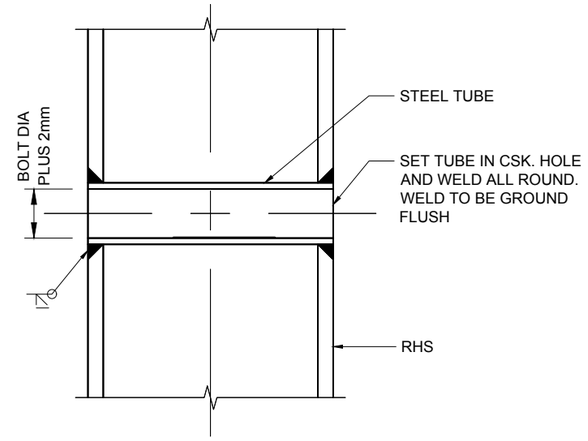

TYPICAL SLEEVED HOLE DETAIL
SCALE: 1:1

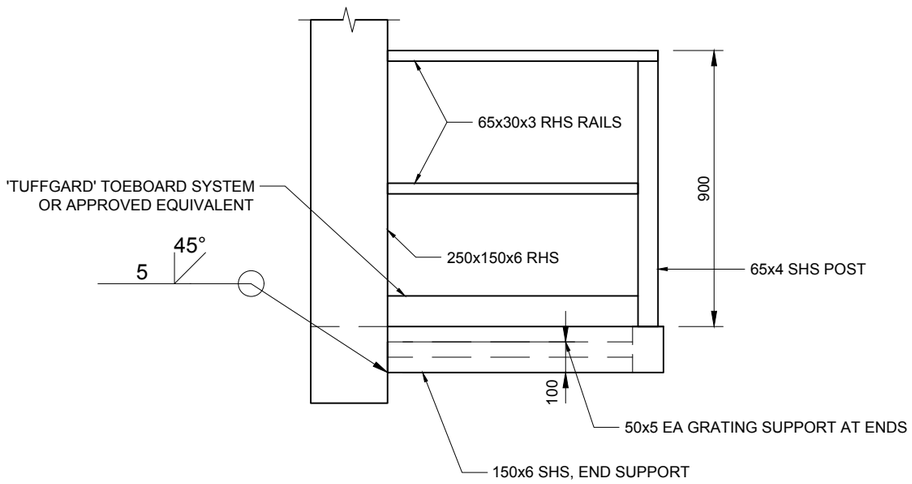

2 ELEVATION
SCALE: 1:20

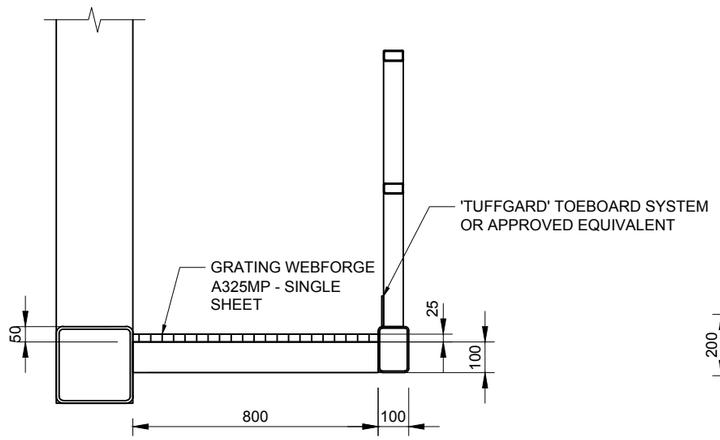

3 SECTION
SCALE: 1:20

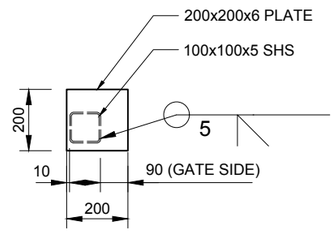

4 END PLATE
SCALE: 1:20

VERSION	AMENDMENT	APPROVED	DATE
R1	Adapted from 6/1277/41/7604/69 R2	T.L. HARRIS	11/06/2018
R0	Design, drawing, recommendations	P. ROONEY	01/06/2018

WAKA KOTAHI NZ TRANSPORT AGENCY

DISCLAIMER: The NZ Transport Agency (Waka Kotahi) and its agents and consultants do not make any warranties or representations of any kind whatsoever in relation to the accuracy, currency or completeness of any of the content in the listed standard drawings and are under no obligation to update or correct any information shown on the drawings. Waka Kotahi does not accept liability for any consequences arising from the use of this document.

DRG NAME	RURAL VMS TYPES A AND B SINGLE-POST SUPPORT ACCESS PLATFORM DETAILS	STATUS	PENDING
		SHEET	83
DRG NUMBER	ITS-04-CONSTRUCTION-201806-DRG-Rural VMS types A and B single-post support access platform details	ORIG DRG NUMBER	000-0000-0-7104-83-R1
SCALE	AS SHOWN @ A3	ISSUE DATE	11/06/2018
		REVISION	R1

GRAPHIC SCALES